lightnet

Lightnet GmbH
Zollstockgürtel 65
50969 Köln / Germany
Tel.: +49 (0) 221 22 25 26-0
E-Mail: info@lightnet.de
www.lightnet.de

RINGO STAR GX/PX | SYSTEM 40MM SUSPENDED

DISC SUSPENSION

1. MONTAGE UND INSTALLATION | MOUNTING AND INSTALLATION:

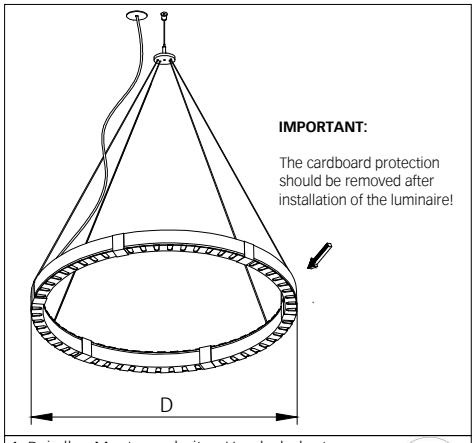

1. Bei allen Montagearbeiten Handschuhe tragen.
Use gloves when handling the fixture.

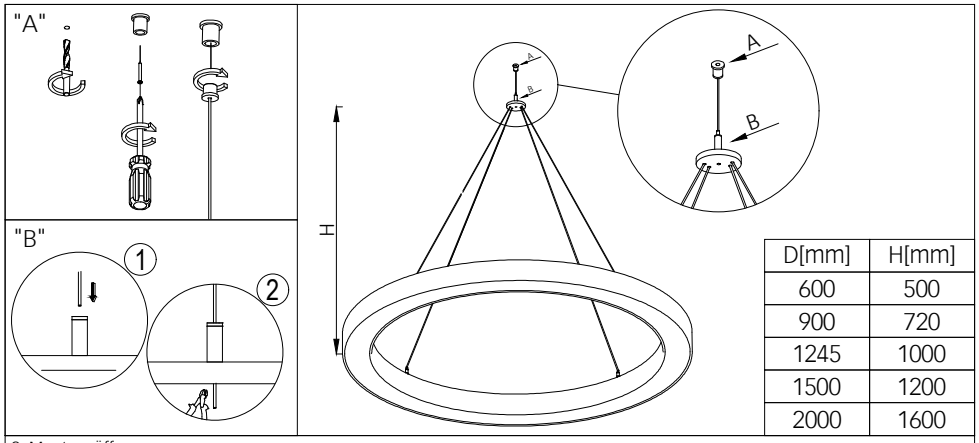

D[mm]	H[mm]
600	500
900	720
1245	1000
1500	1200
2000	1600

2. Montageöffnungen.
Installation openings.

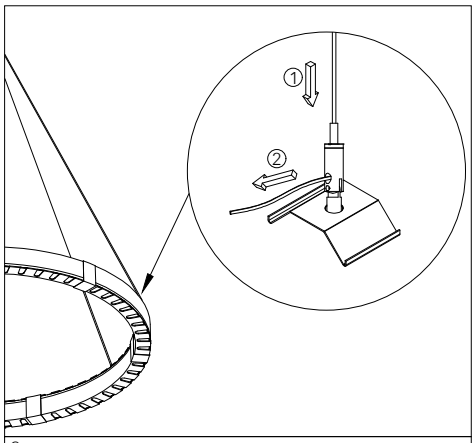

3.

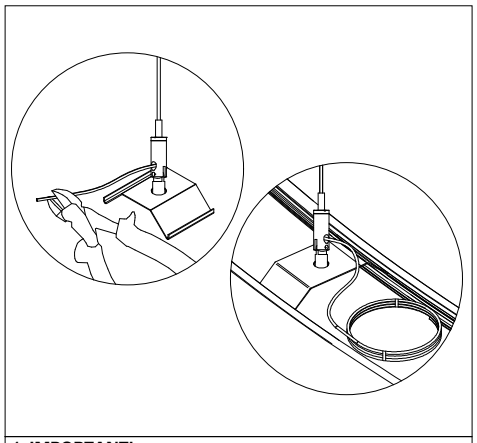

4. **IMPORTANT!**
After levelling the luminaire at the desired height, cut off the excess of the suspension cord or roll it up and secure it to avoid a short-circuit caused by contact with the light sources.

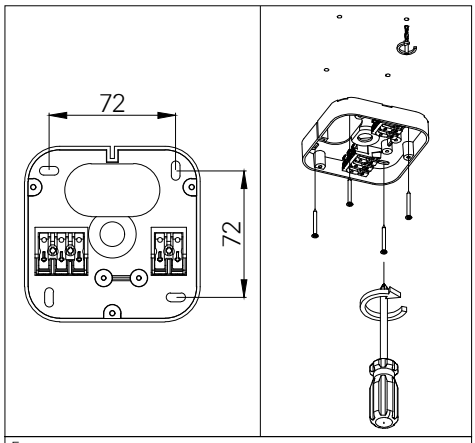

5.

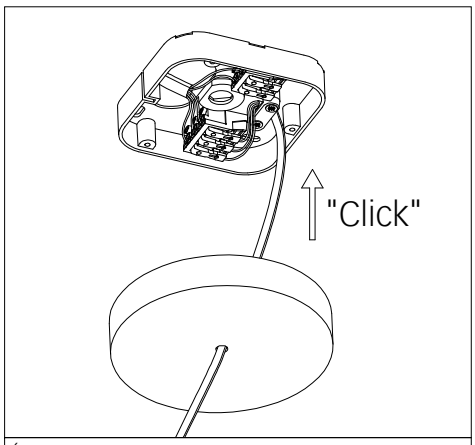

6.

- min/max stripped wire length: 7mm-10mm

- max power supply cable: 1,5mm^2