lightnet

Lightnet GmbH
Zollstockgürtel 65
50969 Köln / Germany
Tel.: +49 (0) 221 22 25 26-0
E-Mail: info@lightnet.de
www.lightnet.de

BEAM ME UP (WALLWASHER) A4 | SURFACE

1. MONTAGE UND INSTALLATION | MOUNTING AND INSTALLATION:

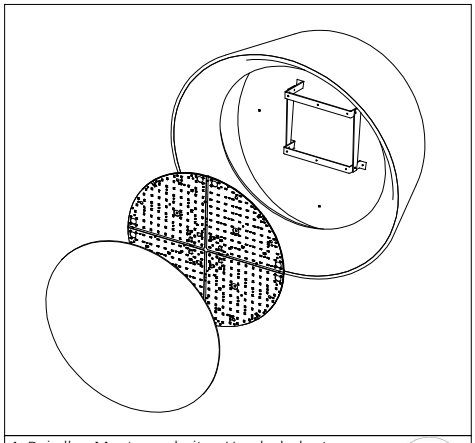

1. Bei allen Montagearbeiten Handschuhe tragen.
Use gloves when handling the fixture.

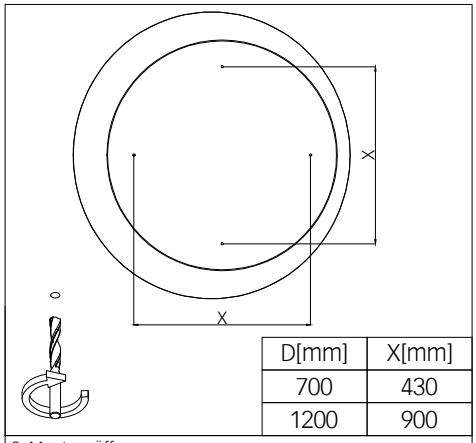

D[mm]	X[mm]
700	430
1200	900

2. Montageöffnungen.
Installation openings.

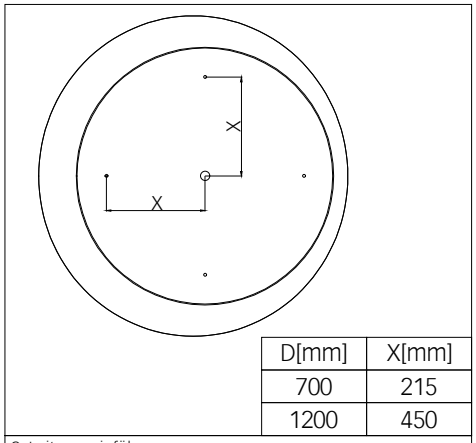

D[mm]	X[mm]
700	215
1200	450

3. Leitungseinführung.
Cable entry point.

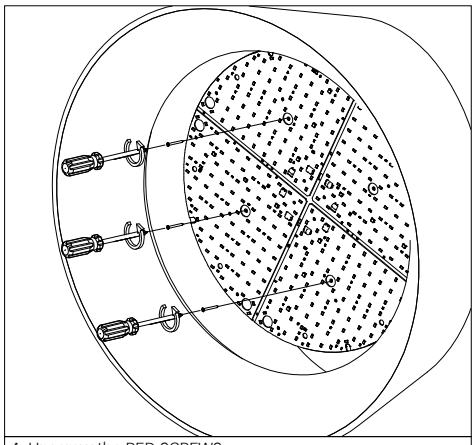

4. Unscrew the RED SCREWS.

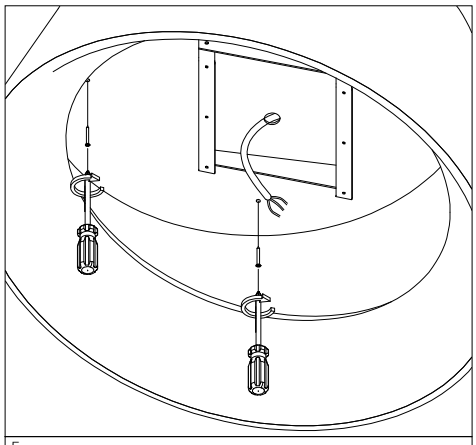

5.

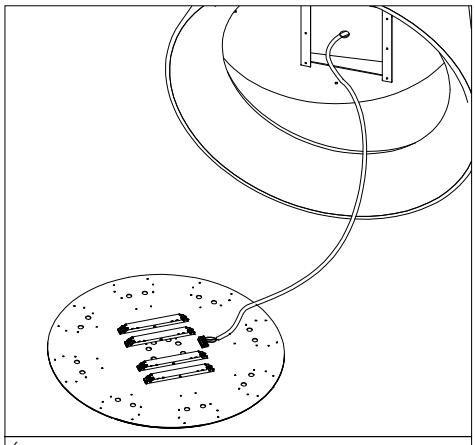

6.
- min/max stripped wire length: 7mm-10mm
- max power supply cable: 1,5mm^2

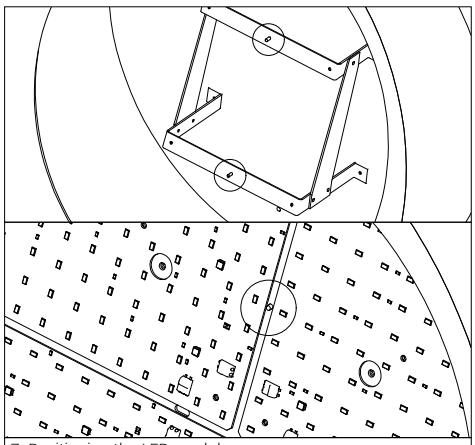

7. Positioning the LED module.

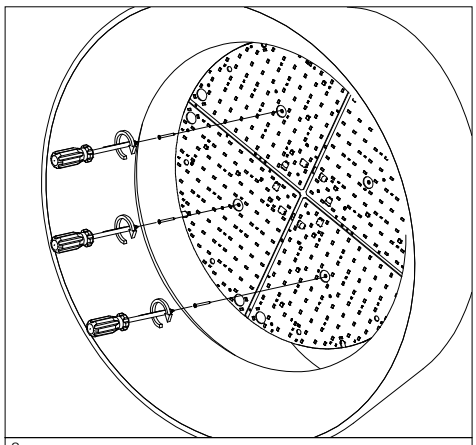

8.

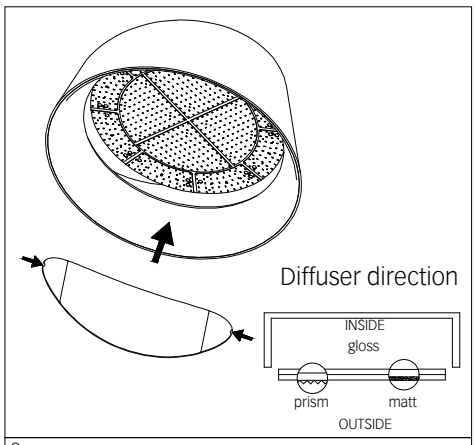

9.