lightnet

Lightnet GmbH
Zollstockgürtel 65
50969 Köln / Germany
Tel.: +49 (0) 221 22 25 26-0
E-Mail: info@lightnet.de
www.lightnet.de

RINGO STAR GY/PY | SYSTEM 40MM SUSPENDED

PARALLEL SUSPENSION WITH RECESSED CANOPY - D2500

1. MONTAGE UND INSTALLATION | MOUNTING AND INSTALLATION:

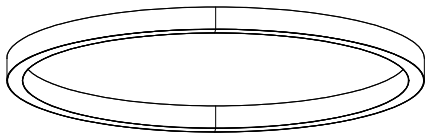

1. Bei allen Montagearbeiten Handschuhe tragen.
Use gloves when handling the fixture.

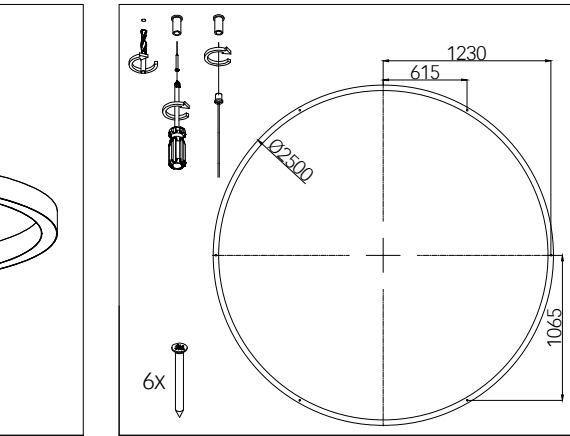

2. Montageöffnungen.
Installation openings.

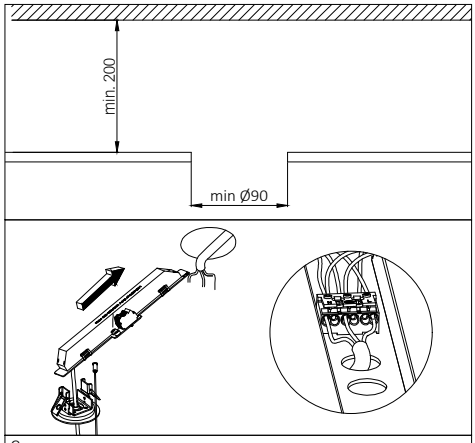

3.
- min/max stripped wire length: 7mm-10mm
- max power supply cable: 1,5mm^2

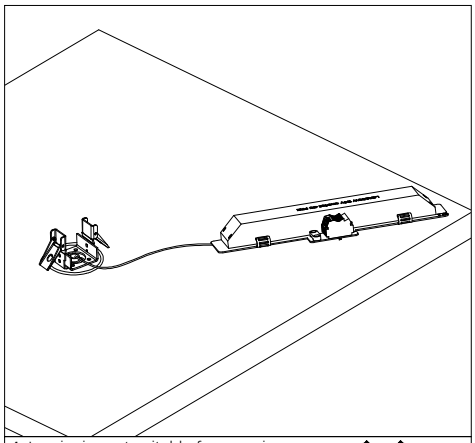

4. Luminaire not suitable for covering with thermally insulating material.

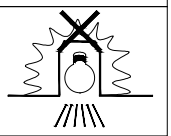

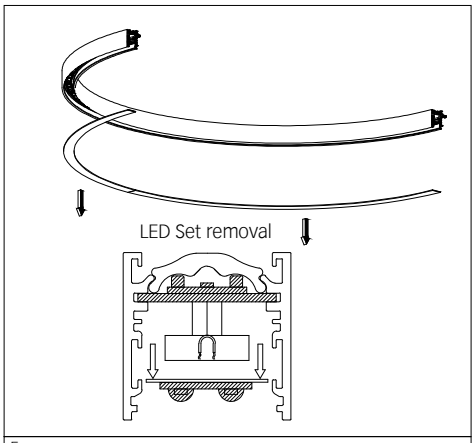

5.

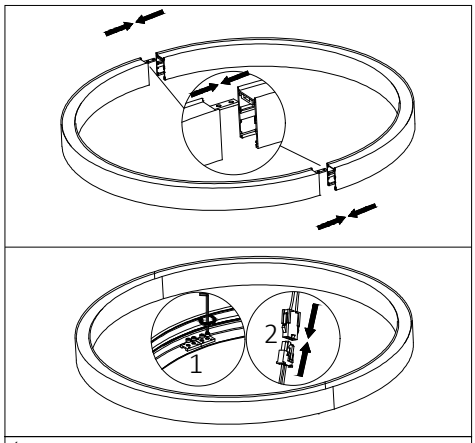

6.

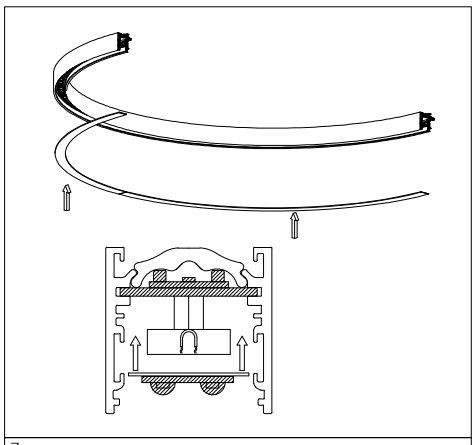

7.

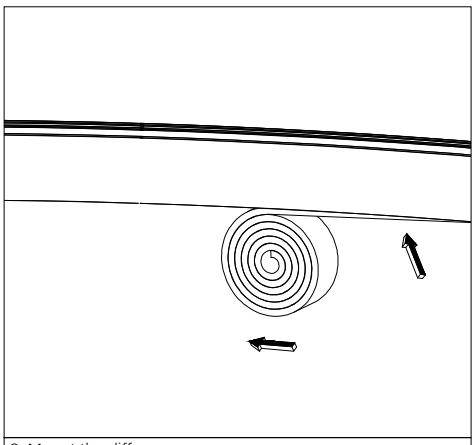

8. Mount the diffuser.

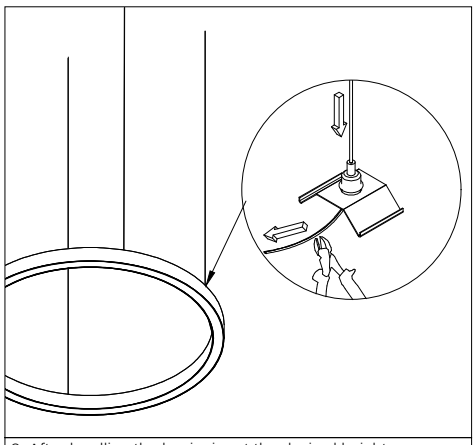

9. After levelling the luminaire at the desired height, cut off the excess of the suspension cord.