lightnet

Lightnet GmbH
Zollstockgürtel 65
50969 Köln / Germany
Tel.: +49 (0) 221 22 25 26-0
E-Mail: info@lightnet.de
www.lightnet.de

RINGO STAR GY/PY | SYSTEM 40MM SUSPENDED

PARALLEL SUSPENSION - D2500

1. MONTAGE UND INSTALLATION | MOUNTING AND INSTALLATION:

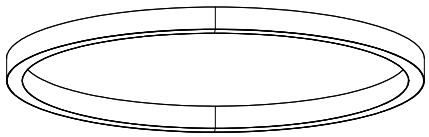

1. Bei allen Montagearbeiten Handschuhe tragen.
Use gloves when handling the fixture.

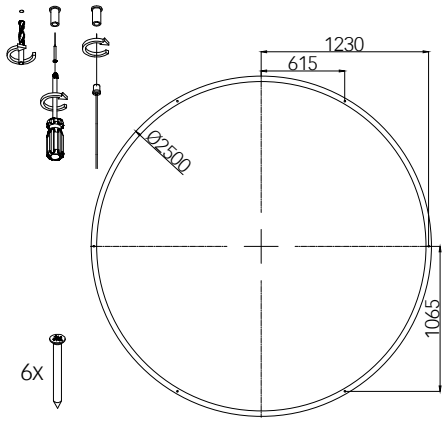

2. Montageöffnungen.
Installation openings.

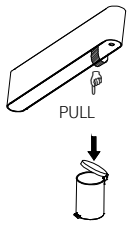

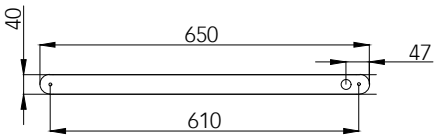

3.

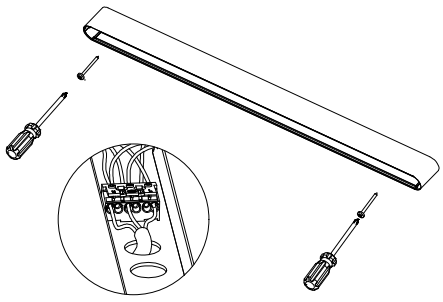

4.

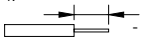

- min/max stripped wire length: 7mm-10mm

- max power supply cable: 1,5mm^2

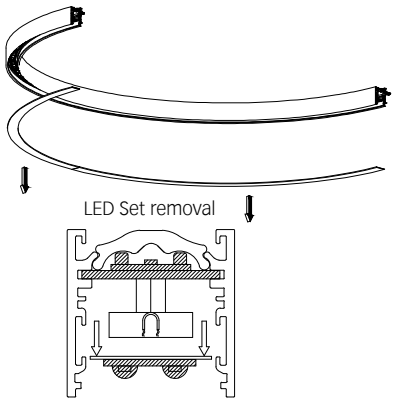

5.

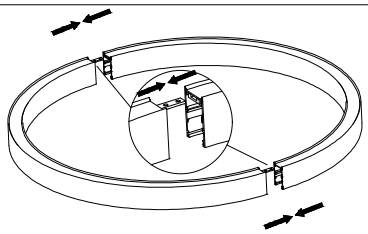

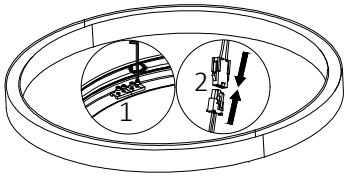

6.

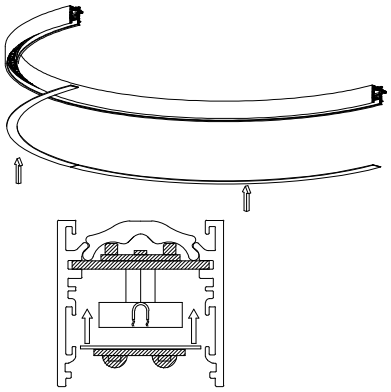

7.

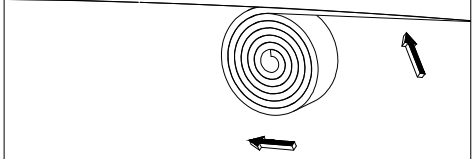

8. Mount the diffuser.

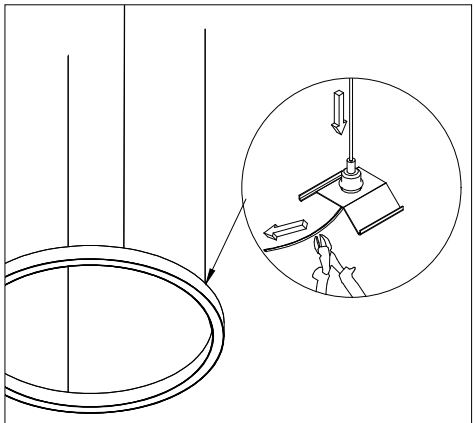

9. After levelling the luminaire at the desired height,
cut off the excess of the suspension cord.