lightnet

Lightnet GmbH
Zollstockgürtel 65
50969 Köln / Germany
Tel.: +49 (0) 221 22 25 26-0
E-Mail: info@lightnet.de
www.lightnet.de

CALEO INVERSE GX/PX | SYSTEM 40MM SUSPENDED

1. MONTAGE UND INSTALLATION | MOUNTING AND INSTALLATION:

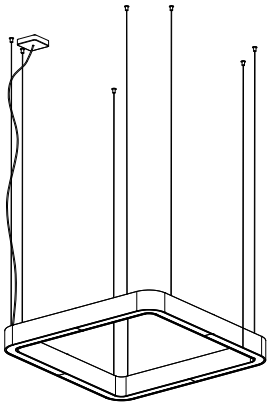

1. Bei allen Montagearbeiten Handschuhe tragen.
Use gloves when handling the fixture.

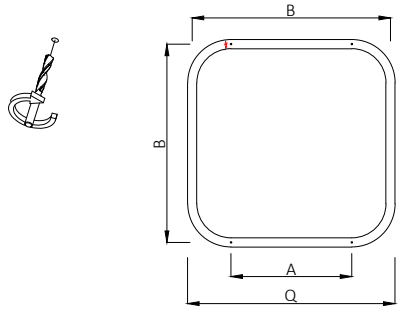

Q [mm]	A [mm]	B [mm]
642	241	602
905	510	865
1172	776	1132

2. Montageöffnungen.
Installation openings.

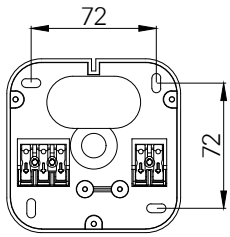

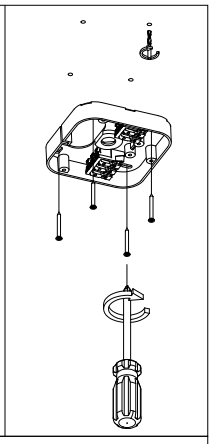

3.

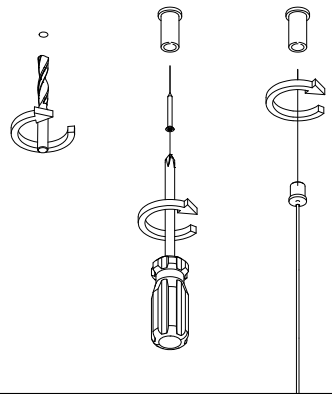

4.

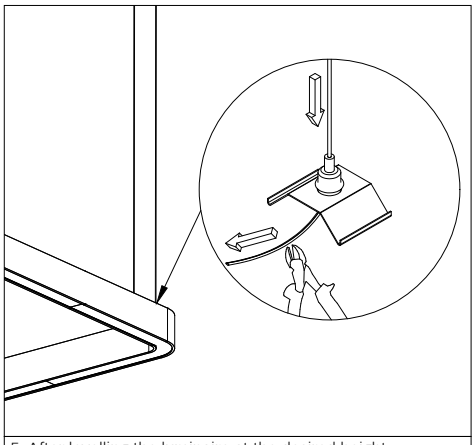

5. After levelling the luminaire at the desired height,
cut off the excess of the suspension cord.

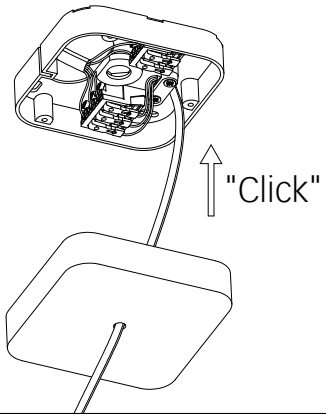

6.

- min/max stripped wire length: 7mm-10mm

- max power supply cable: 1,5mm^2