lightnet

Lightnet GmbH
Zollstockgürtel 65
50969 Köln / Germany
Tel.: +49 (0) 221 22 25 26-0
E-Mail: info@lightnet.de
www.lightnet.de

CUBIC MAX G2/P2 | SUSPENDED

1. MONTAGE UND INSTALLATION | MOUNTING AND INSTALLATION:

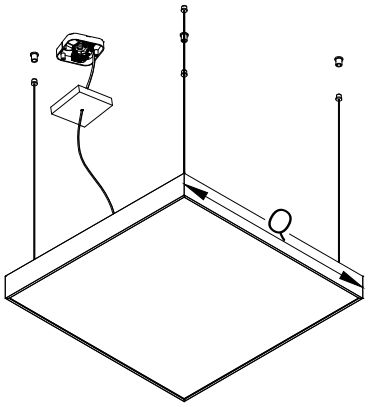

1. Bei allen Montagearbeiten Handschuhe tragen.
Use gloves when handling the fixture.

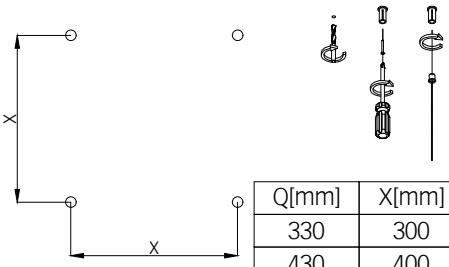

Q[mm]	X[mm]
330	300
430	400
530	500
630	600
900	860
1200	1160

2. Montageöffnungen.
Installation openings.

Q1500

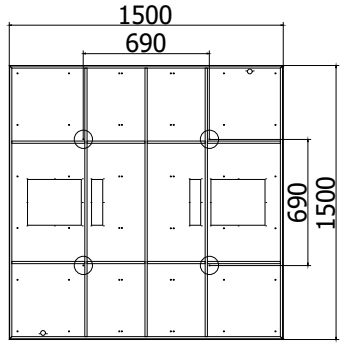

3. CG2/CP2 Q1500

Q2000

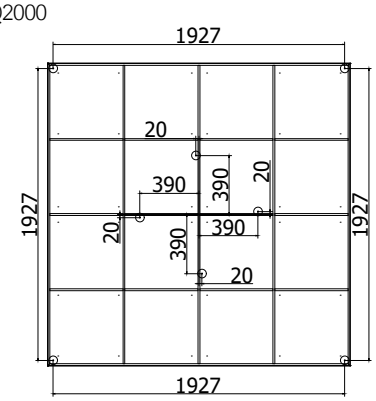

4. CG2/CP2 Q2000

Q330 - Q1200

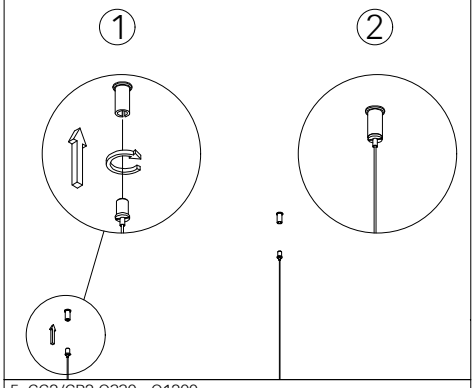

5. CG2/CP2 Q330 - Q1200

Q1500 - Q2000

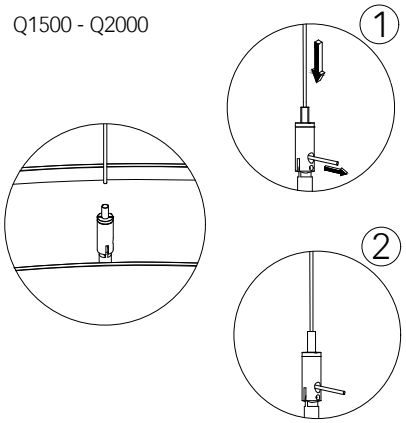

6. CG2/CP2 Q1500 - Q2000

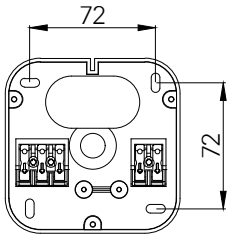

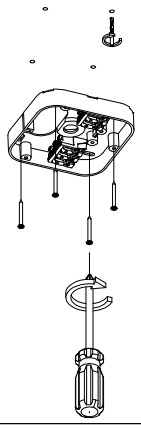

7.

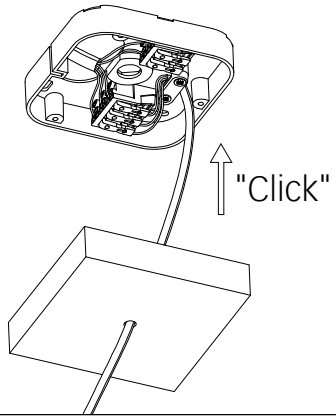

8.

- min/max stripped wire length: 7mm-10mm

- max power supply cable: 1,5mm^2

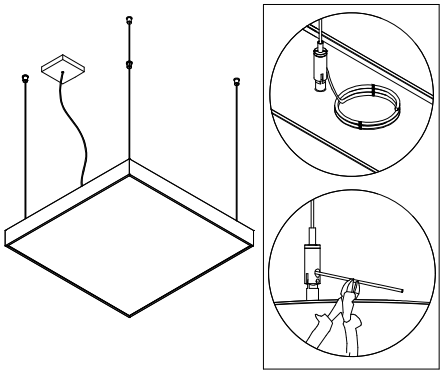

9. **IMPORTANT!**
After levelling the luminaire at the desired height, cut off the excess of the suspension cord or roll it up and secure it to avoid a short-circuit caused by contact with the light sources.