lightnet

Lightnet GmbH
Zollstockgürtel 65
50969 Köln / Germany
Tel.: +49 (0) 221 22 25 26-0
E-Mail: info@lightnet.de
www.lightnet.de

CUBIC EVOLUTION U4 | SUSPENDED

1. MONTAGE UND INSTALLATION | MOUNTING AND INSTALLATION:

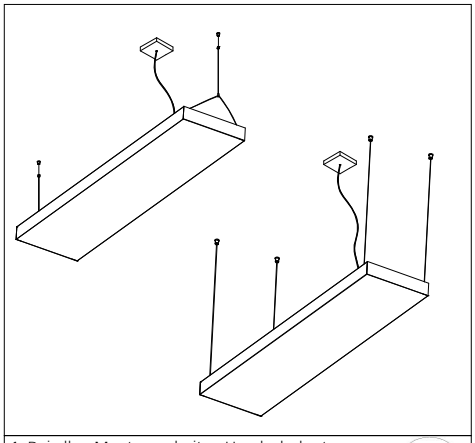

1. Bei allen Montagearbeiten Handschuhe tragen.
Use gloves when handling the fixture.

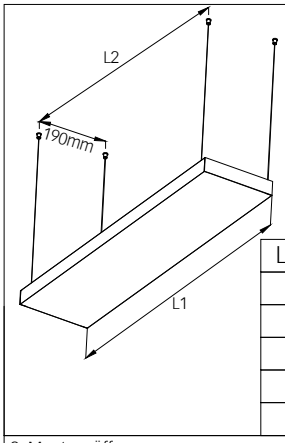

L1[mm]	L2[mm]
900	870
1200	1170
1500	1470
1800	1770
2100	2070

2. Montageöffnungen.
Installation openings.

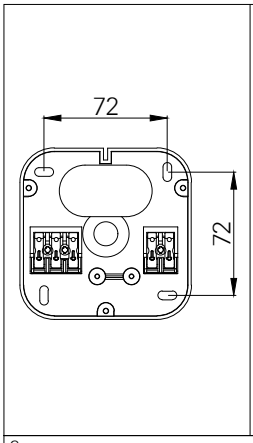

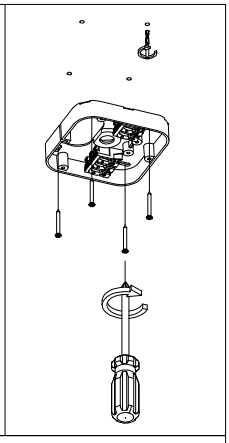

3.

Y-CORD SUSPENSION

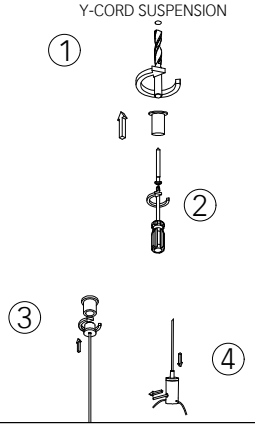

4.

PARALLEL 4-CORD SUSPENSION

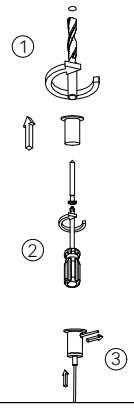

5.

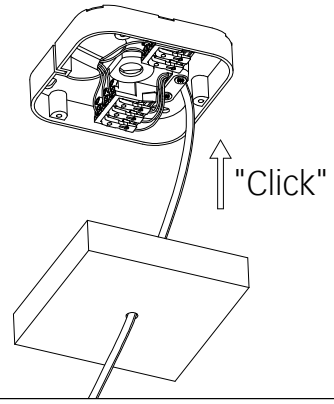

6.

- min/max stripped wire length: 7mm-10mm

- max power supply cable: 1,5mm^2

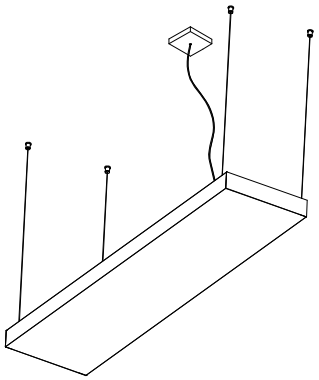

7.