lightnet

Lightnet GmbH
Zollstockgürtel 65
50969 Köln / Germany
Tel.: +49 (0) 221 22 25 26-0
E-Mail: info@lightnet.de
www.lightnet.de

# BEAM ME UP (MAX) G1/P1 | SUSPENDED

## CENTRAL SUSPENSION

1. MONTAGE UND INSTALLATION | MOUNTING AND INSTALLATION:

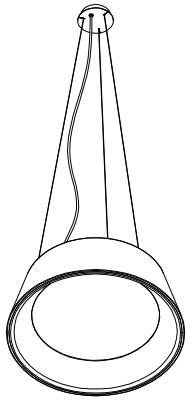

1. Bei allen Montagearbeiten Handschuhe tragen.
Use gloves when handling the fixture.

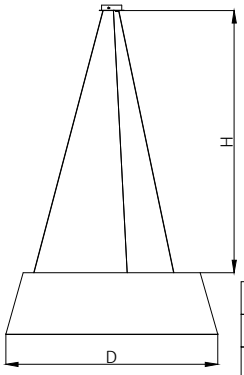


H: minimal suspension height

| D[mm] | H[mm] |
|---|---|
| 400 | 300 |
| 700 | 600 |
| 1200 | 1100 |

2. Montageöffnungen.
Installation openings.

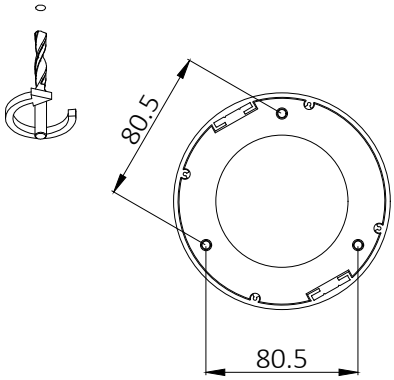


3.

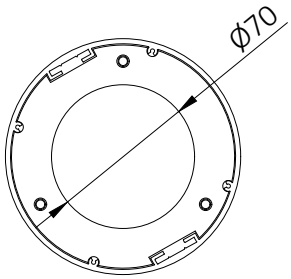


4.

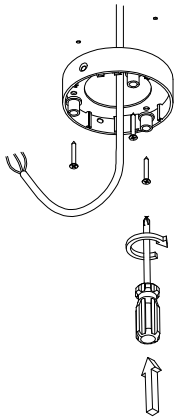

5.

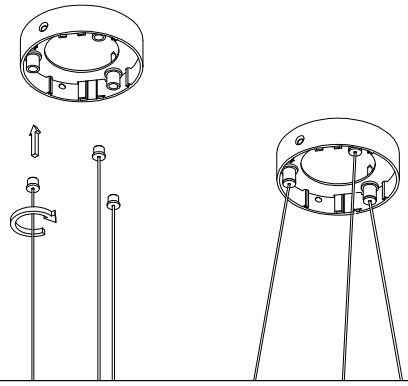

6.

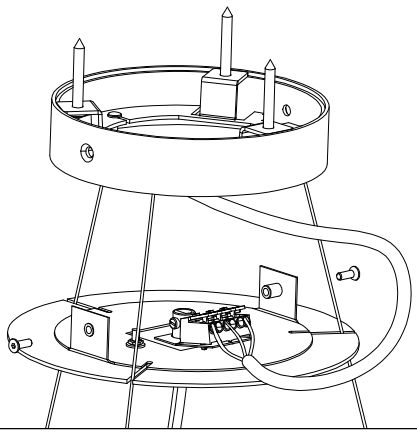

7.

- min/max stripped wire length: 7mm-10mm

- max power supply cable: 1,5mm$^2$

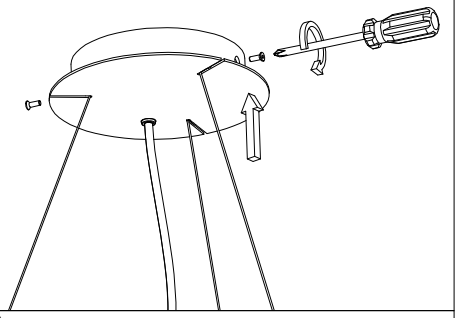

8.