# lightnet

Lightnet GmbH
Zollstockgürtel 65
50969 Köln / Germany
Tel.: +49 (0) 221 22 25 26-0
E-Mail: info@lightnet.de
www.lightnet.de

# LIQUID LINE WX | SYSTEM 40MM WALL

## 1. MONTAGE UND INSTALLATION | MOUNTING AND INSTALLATION:

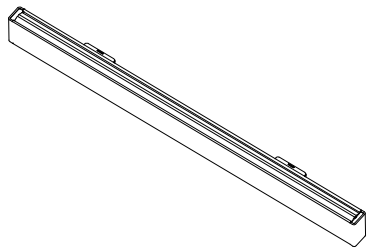

1. Bei allen Montagearbeiten Handschuhe tragen.
Use gloves when handling the fixture.

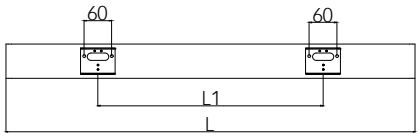


| L[mm] | L1[mm] |
|---|---|
| 600 | 200 |
| 890 | 490 |
| 1182 | 782 |
| 1475 | 1075 |
| 1765 | 1365 |
| 2055 | 1655 |

2. Montageöffnungen.
Installation openings.

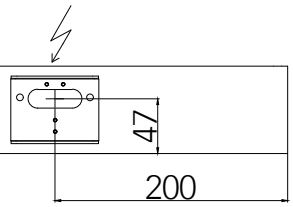


3. Leitungseinführung.
Cable entry point.

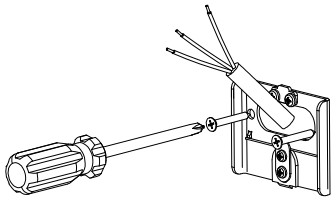

4.

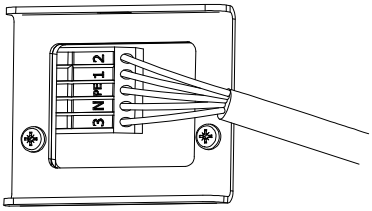


5.
- min/max stripped wire length: 7mm-10mm
- max power supply cable: 1,5mm$^2$

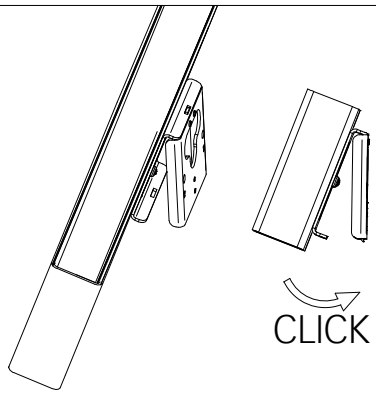


6.

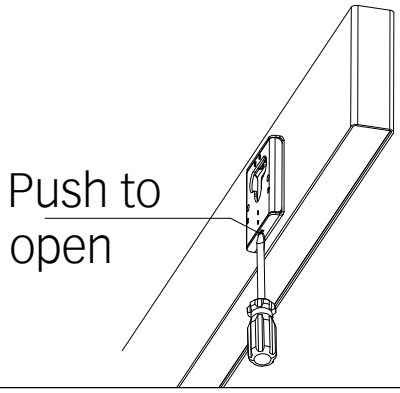


7.

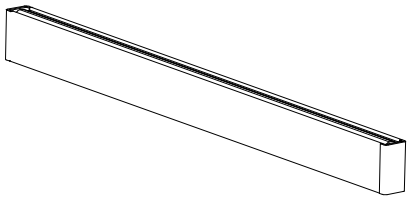

8. Non-user replaceable light source.