lightnet

Lightnet GmbH
Zollstockgürtel 65
50969 Köln / Germany
Tel.: +49 (0) 221 22 25 26-0
E-Mail: info@lightnet.de
www.lightnet.de

MATRIC CONNECTORS | AXF

1. MONTAGE UND INSTALLATION | MOUNTING AND INSTALLATION:

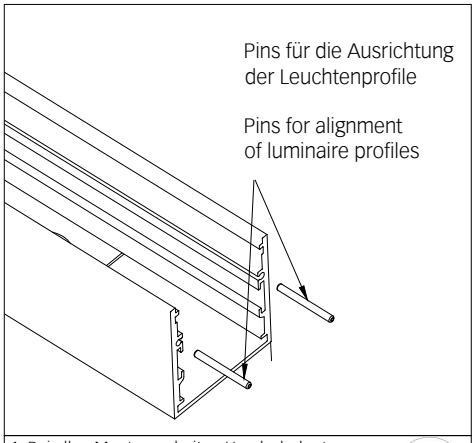

1. Bei allen Montagearbeiten Handschuhe tragen.
Use gloves when handling the fixture.

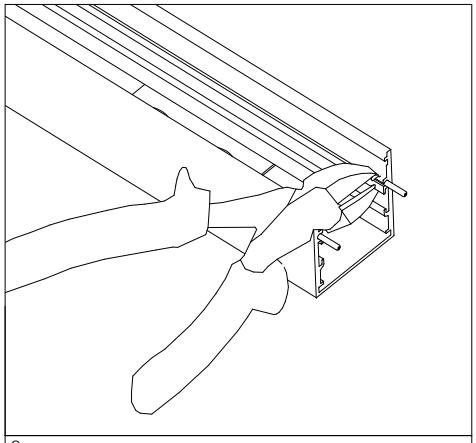

2.

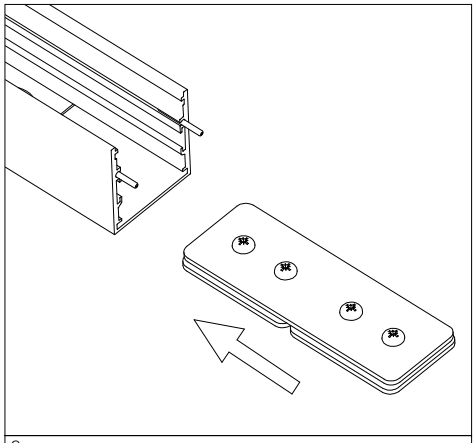

3.

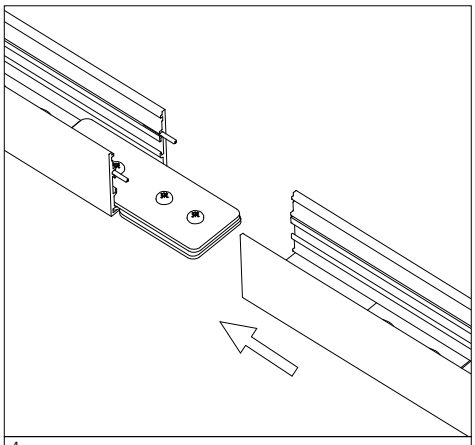

4.

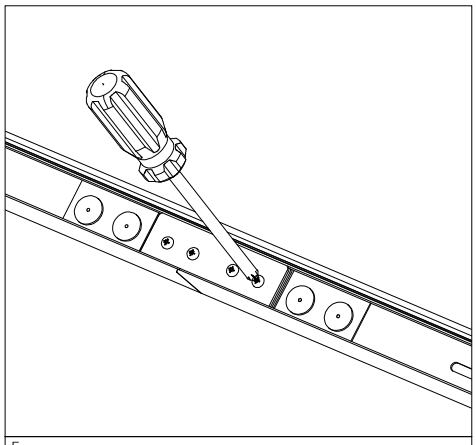

5.

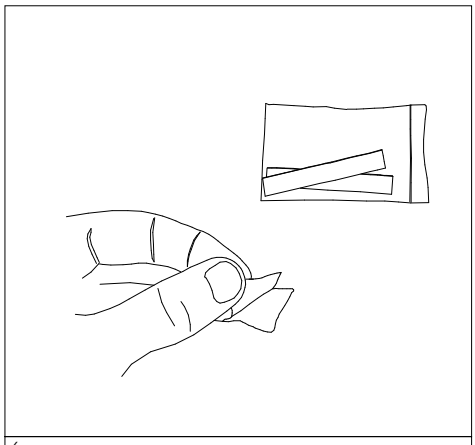

6.

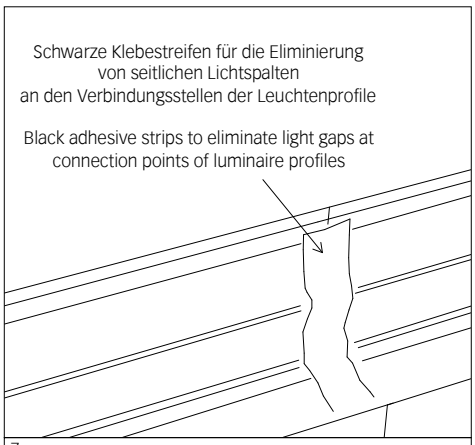

7.

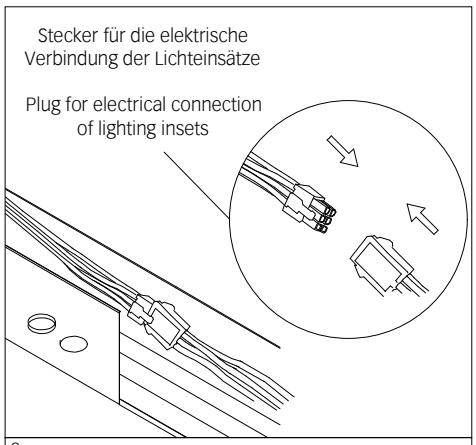

8.

IMPORTANT:

-all sections must be perfectly in line and if surface isn't even make sure the elements are horizontally mounted

-if these conditions are not satisfied gaps will be the result

9.