lightnet

Lightnet GmbH
Zollstockgürtel 65
50969 Köln / Germany
Tel.: +49 (0) 221 22 25 26-0
E-Mail: info@lightnet.de
www.lightnet.de

MATRIC W4 | SYSTEM 55MM WALL

1. MONTAGE UND INSTALLATION | MOUNTING AND INSTALLATION:

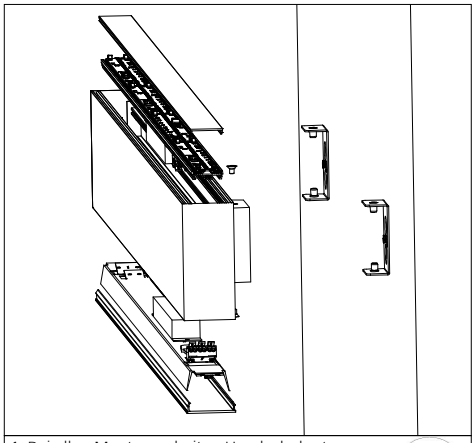

1. Bei allen Montagearbeiten Handschuhe tragen.
Use gloves when handling the fixture.

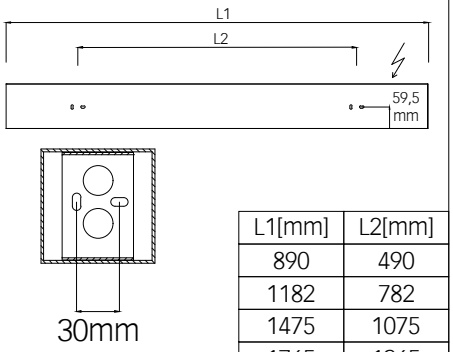

L1[mm]	L2[mm]
890	490
1182	782
1475	1075
1765	1365
2055	1655

2. Montageöffnungen.
Installation openings.

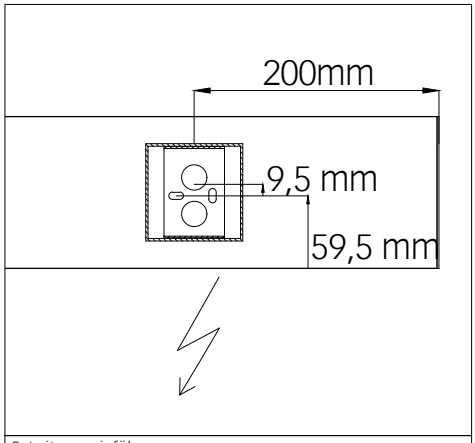

3. Leitungseinführung.
Cable entry point.

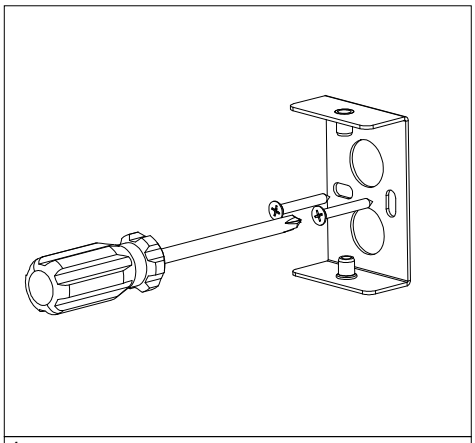

4.

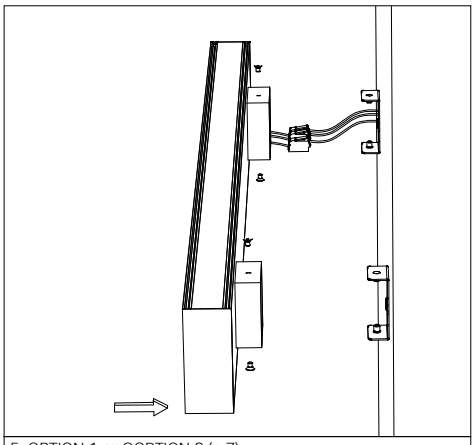

5. OPTION 1 or OOPTION 2 (p.7)

- min/max stripped wire length: 7mm-10mm

- max power supply cable: 1,5mm^2

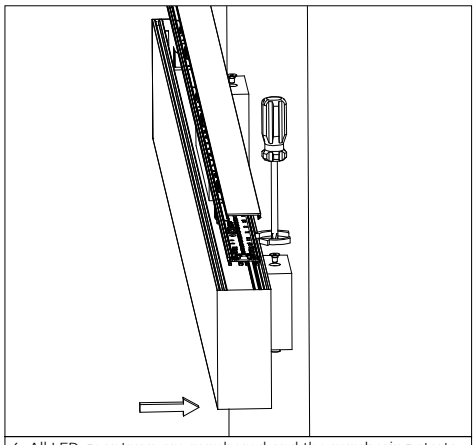

6. All LED gear trays are numbered and the numbering starts from the cable entry side.
In non-standard luminaires the numbering of LED gear trays is made in accordance with technical drawings.

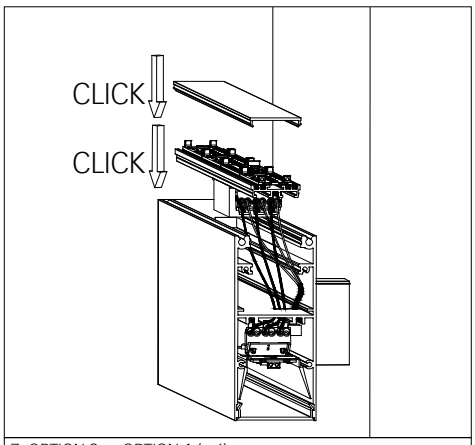

7. OPTION 2 or OPTION 1 (p.6)

Imprtant: Minimum cable length ~200mm

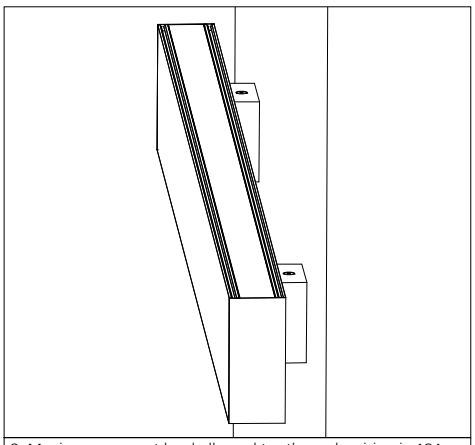

8. Maximum current load allowed tor through-wiring is 13A.
Non-user replaceable light source.

The light source contained in this luminaire shall only be replaced by the manufacturer or his service agent or a similar qualified person.